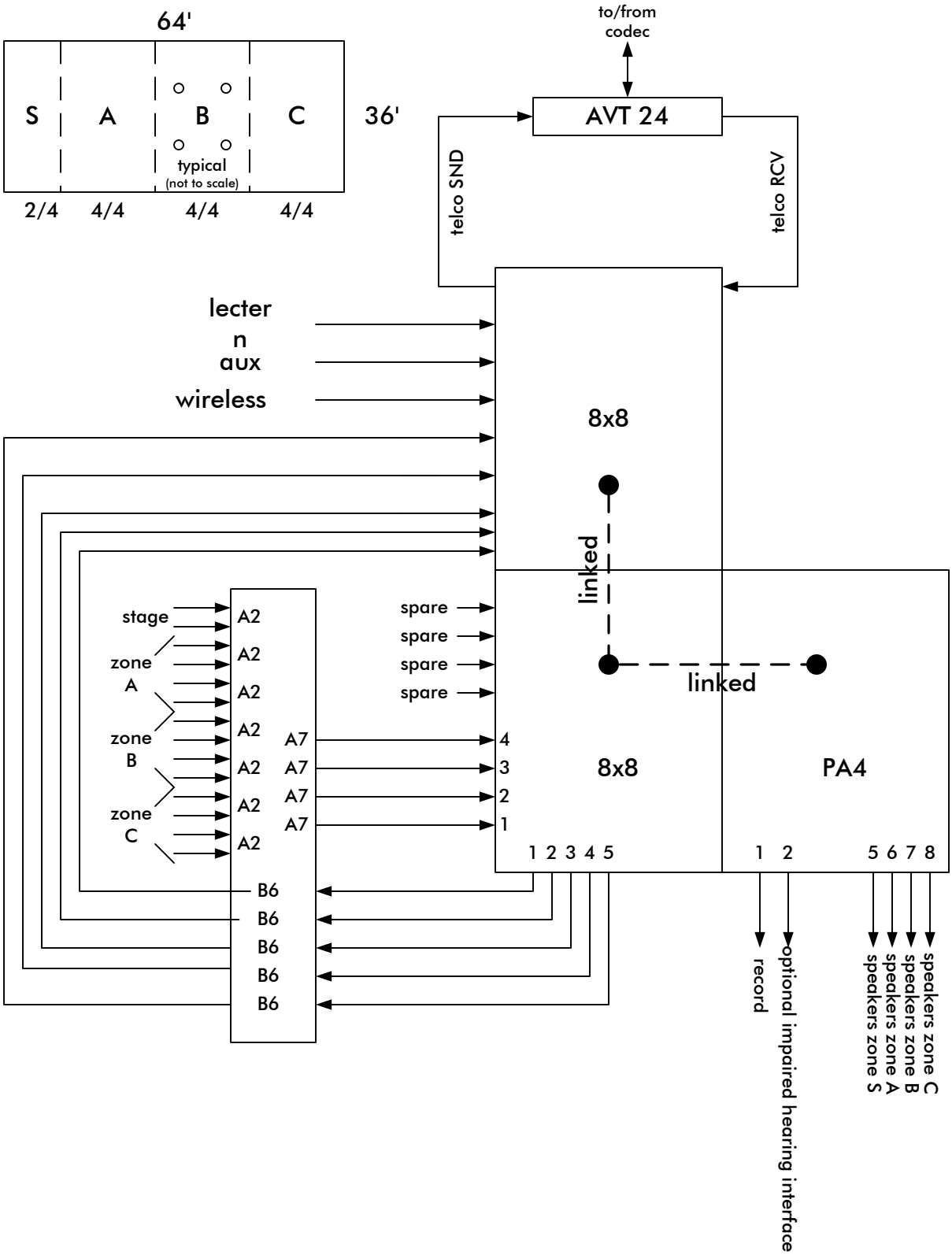

Drawn by: ACN/jlt/SCT	SOUND CONTROL TECHNOLOGIES INC 28 Knight Street Norwalk, CT., USA 06851 Phone (203) 854-5701 Fax (203) 854-5702
Checked by:	
	4 Zone Classroom w/ Conferencing (Zones A, B, C, & Stage)
Drawing: bd040903.vsd	

© SOUND CONTROL TECHNOLOGIES, INC. 2004

Rev: -